BULK SOLIDS FEEDING

www.EMCoprema.si
ID za DDV: SI60303255
E-mail: info@emcoprema.si

# ROTARY VALVES

## ACCURATE FEEDING DEVICES

## FOR PNEUMATIC CONVEYING SYSTEMS

## FOR WOOD PELLETS

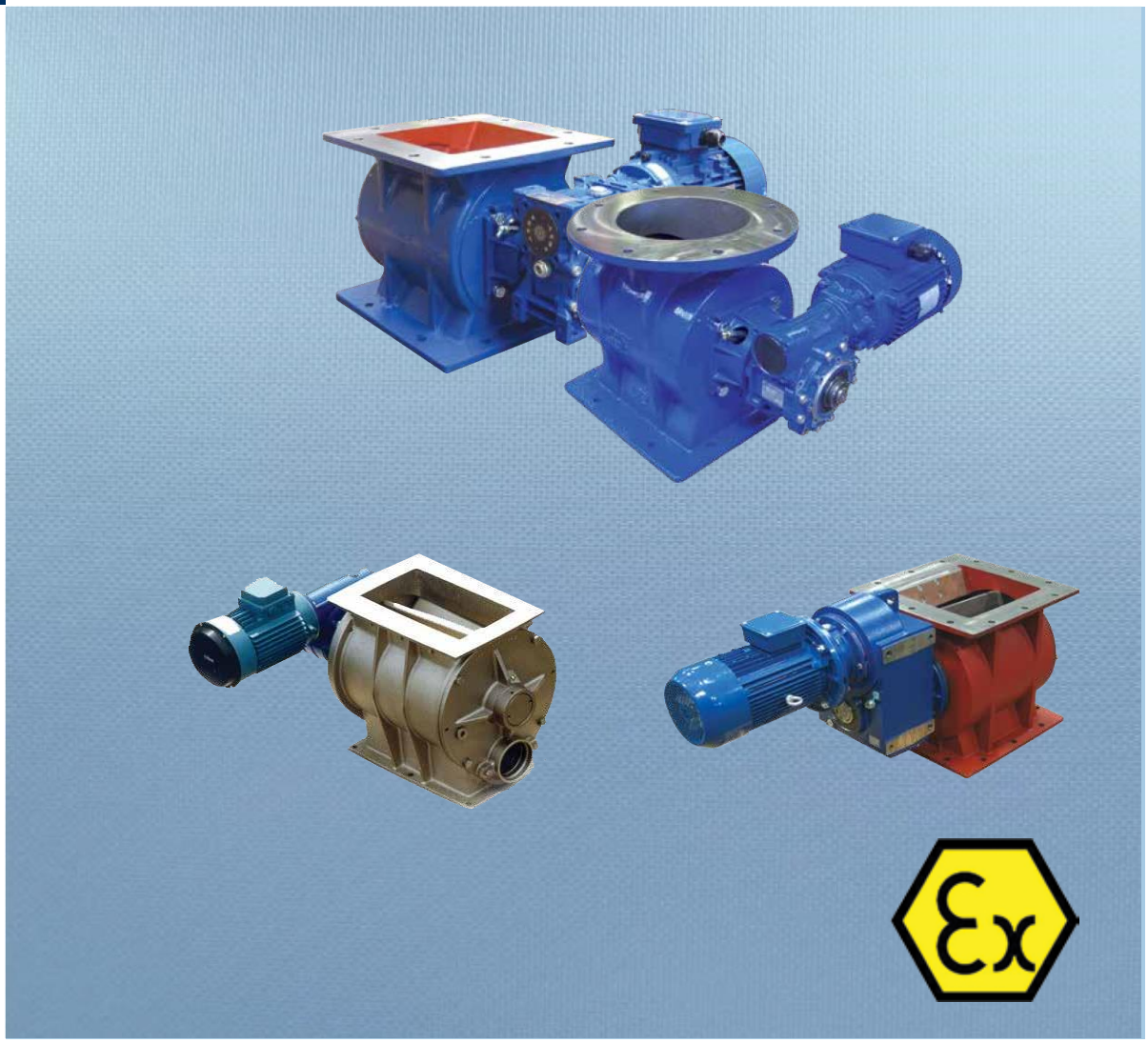

WAMGROUP

TOREX®

# RV/RVR

## Rotary Valves

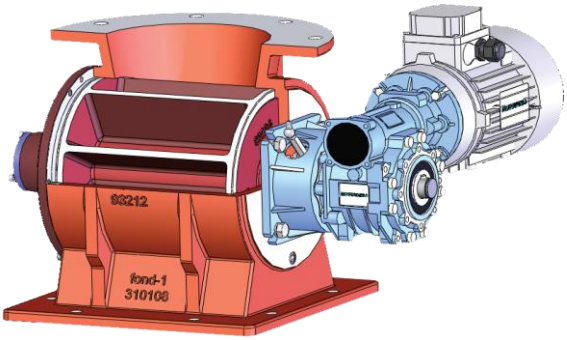

| BARE SHAFT | DIRECT DRIVE | GEAR BOX DRIVE |
|---|---|---|

## Features

- Round Inlet Diameter: 150 mm (6”) – 200 mm (8”) – 250 mm (10”) - 300 mm (12 in)
- Square Inlet Dimension: 150x150 mm – 200x200 mm – 250x250 mm – 300x300 mm (6”x6” – 8”x8” – 10”x10” – 12”x12”)
- Capacity: 2 – 5 – 10 – 20 litres/rev (0.07 – 0.17 – 0.35 – 0.7 cu ft/rev)
- Working Temperature: from -40 °C up to 150°C
- Working Pressure: from – 0.5 bar up to + 0.3 bar
- Material of construction: Cast Iron, 304 Stainless Steel and 316 Stainless Steel for RV only

## Benefits

- ✓ **Square or round inlet flanges;**
- ✓ **Round Flange bolt pattern according to DIN 2576 PN10;**
- ✓ **Possibility of complete compatibility with WAM® standard of flange drilling on inlet and outlet;**
- ✓ **Sturdy compact structure;**
- ✓ **Drive unit mounted directly on shaft without further bearing assembly or coupling;**
- ✓ **Easy access to internal mechanical parts;**
- ✓ **Various materials and treatments available depending on material handled;**
- ✓ **ATEX 20/22 version available;**
- ✓ **Flame Proof and Explosion Proof Protection Devices certification available.**

## ATEX Approvals

### RV-RVR...E

**Flame Proof and Explosion Protection Device**

Cert.No.IBExU11ATEX2014X
EN 15089 - Explosion Isolation System

CE 0948 Ex II 1D/3D c T135°C
CE 0637 Ex D

The RV-RVR…E explosion protection device are ATEX certified for zone 20/22 and are used as a protective and dust explosion-flame proof system up to 1.2 bar.
Suitable to be used under dust filters, cyclones, product separators, pneumatic conveying and dosing systems within the following conditions:

### RV – RVR... X

**ATEX Rotary Valve**

ATEX 20/22 Certified

CE 0948 Ex II 1D/3D c T135°C

The ATEX rotary valves are designed and tested for use in potentially explosive zones classified as ZONE 22 or non classified zones and with process atmospheres (inside the valve) classified as ZONE 20 in accordance with Directive 94/9/EC and 1999/92/EC.

EMC
www.EMCoprema.si

# RVS/RVC

## Pneumatic Rotary Valve

Blow-Through Rotary Valves RVS

Drop-Through Rotary Valves RVC

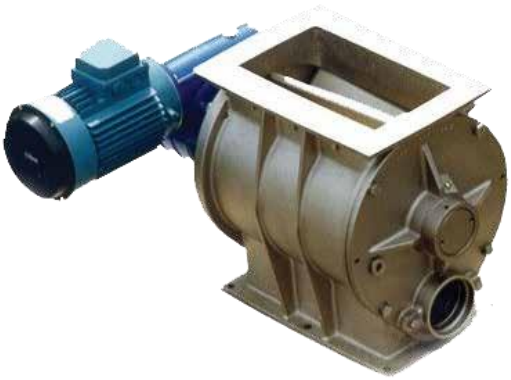

## HIGH FILLING EFFICIENCY AND PRECISE METERING IN GRAVITY FEEDING AND PNEUMATIC CONVEYING OF POWDERS AND GRANULES

**RVS Blow-Through Rotary Valves** have two compartments at a time of the continuously turning rotor filled up with material through the inlet at the top. After less then half a turn the material is conveyed into an air stream of a pneumatic conveying pipe passing through the bottom of the rotary valve.

**With RVC Drop-Through Rotary Valves**, which have a similar design, the material falls out through the bottom outlet by gravity into a container, a conveyor or pneumatic conveying system.

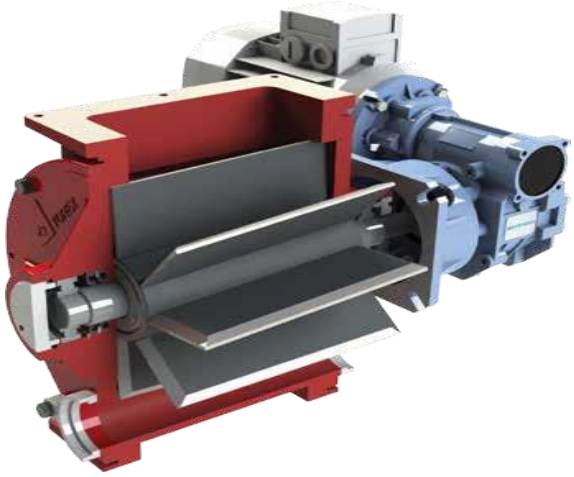

## Features

- Capacity: 5 – 10 – 15 – 20 – 38 – 78 litres per revolution (0.17 – 0.35 – 0.52-0.7 – 1.23 – 2.82 cu ft/rev)
- Working temperature: from -40 °C up to 220°C
- Working pressure: from – 0.5 bar up to 0.8 bar
- Material: cast iron or 304 stainless steel

## ATEX Approvals

**RVC...E** — **Flame Proof and Explosion Protection Device**

ATEX 20/22 Certified

CE 0948 Ex II 1D/3D c T135°C

CE 0948 Ex D St2

EC Type Cert.FTZÚ14 ATEX 0053X

EN 15089:2009 - Explosion Protection Device

The RVC…E explosion protection device are ATEX certified for zone 20/22 and are used as a protective and dust explosion-flame proof system up to 6 bar.

Suitable to be used under silo, hoppers, dust filters, cyclones, product separators, pneumatic conveying and dosing systems within the following conditions:

**RVS – RVC... X** — **ATEX Rotary Valves**

ATEX 20/22 Certified

CE 0948 Ex II 1D/3D c T135°C

Cert.No.EX5 07 01 61456 002

ATEX rotary valves are designed and tested for use in potentially explosive zones classified as ZONE 22 or non-classified zones and with process atmospheres (inside the valve) classified as ZONE 20 in accordance with Directive 94/9/EC and 1999/92/EC.

Air-Purged Seals

External bearing

External bearing

External bearing

EMC

www.EMCoprema.si

# RWN

## For Wood Pellets and Chippings

Rotary Valve for Wood Pellets and Chippings RWN

**COMPLETE PROTECTION AGAINST BURN-BACK, ENHANCED CUTTING ACTION AND REDUCED COMPRESSIVE FORCES, MAKES RWN THE PERFECT SOLUTION FOR WOOD CHIPS AND WOOD PELLETS APPLICATIONS**

RWN Drop-Through Rotary Valves are designed to work with common wood pellets and chippings.

## Features

- Square inlet dimensions: 150x150 mm – 200x200 mm – 250x250 mm – 300x300 mm ((6x6" - 8x8" - 10x10" - 12x12")
- Capacity: 2 – 5 – 10 – 20 litres/rev. (0.07 – 0.17 – 0.35 – 0.7 cu ft/rev)
- Working temperature: from -20°C up to 150°C (-4°F up to 300°F)
- Casing and flange material: cast iron
- Rotor: 4 sharp-edged blades manufactured from hardened steel

## Overall Dimensions

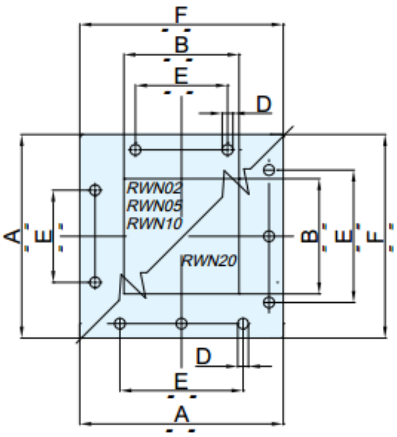


| STANDARD DIMENSIONS (mm) | | | | | |
|---|---|---|---|---|---|
| Type | A | B | D | E | F |
| RWN02 | 265 | 150 | 14 | 120 | 225 |
| RWN05 | 320 | 200 | 14 | 150 | 280 |
| RWN10 | 375 | 250 | 14 | 180 | 335 |
| RWN20 | 440 | 300 | 18 | 260 | 400 |

RWN 02-05

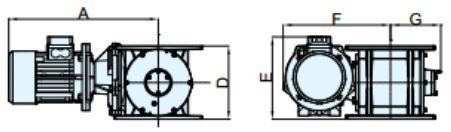


RWN 10-20

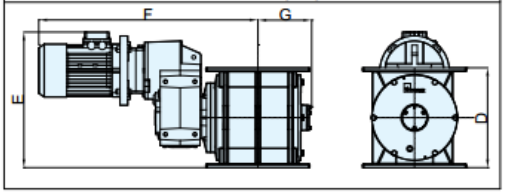


| Type | A* | D | E* | F* | G | Rotor Speed (rpm) | Motor Power (kW) |
|---|---|---|---|---|---|---|---|
| RWN 02 | 500 | 220 | 248 | 325 | 131 | 20 | 0.75 |
| | | | | | | 30 | 1.1 |
| RWN 05 | 540 | 280 | 237 | 340 | 162 | 20 | 1.1 |
| | | | | | | 30 | 1.5 |
| RWN 10 | / | 360 | 490 | 792 | 188 | 20 | 1.5 |
| | | | | | | 30 | 2.2 |
| RWN 20 | / | 455 | 561 | 855 | 226 | 20 | 2.2 |
| | | | | | | 30 | 3.0 |

*(*) dimensions may vary depending on different standards.*

EMC
www.EMCoprema.si